MICRO-EPSILON

# More Precision

## scanCONTROL // 2D/3D Laser profile sensors

# Powerful 2D/3D laser scanners with highest precision
# scanCONTROL 30x0

- High resolution in x- and z-axis for accurate profile measurement
- Profile frequency up to 10 kHz for monitoring of dynamic processes
- Innovative exposure control
- For small and large measurement areas
- Also available with patented Blue Laser Technology
- Compatible with COGNEX® VisionPro

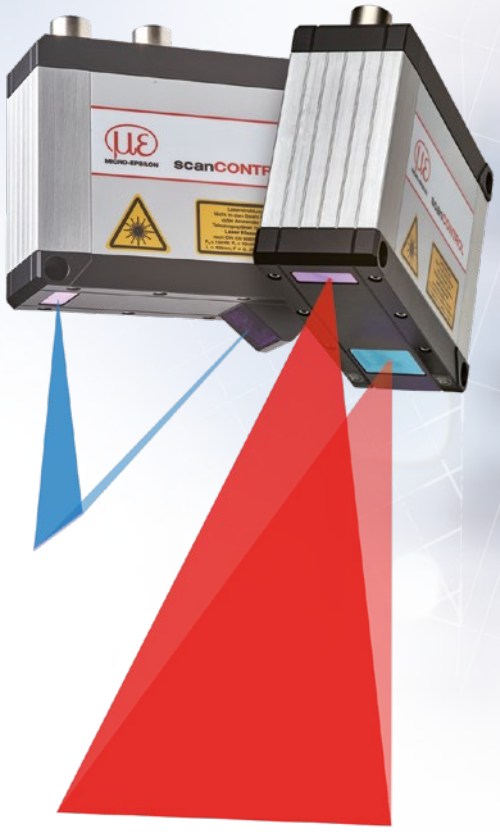

SMART
PROFILE

### Fast and precise 2D/3D profile measurements

The new LLT30x0 laser profile scanners provide calibrated profile data with up to 9.6 million points per second. Thanks to their high accuracy, high profile frequency and versatility, these powerful scanners are suitable for demanding measurement tasks. They measure and evaluate, e.g., angles, steps, gaps, distances and circles with high precision. These sensors also offer predefined operating modes that enable optimal results for various applications.

### Available as PROFILE and SMART versions

The scanCONTROL 30x0 series is available as PROFILE and SMART versions. PROFILE scanners provide calibrated profile data that can be further processed on a PC using software provided by the customer. With the 3DInspect software, the scanCONTROL sensors can also be used for 3D evaluations. SMART series scanners work independently and provide selected measurement values. The scanCONTROL 30x0 series supports all SMART functions and programs that are set in the scanCONTROL Configuration Tools software and directly stored in the internal controller.

### Article designation

| LLT | 30 | x0 | -25 | /SI |
|---|---|---|---|---|

**Options** - see below

**Measuring range**
25 mm
50 mm
100 mm
200 mm
430 mm
600 mm

**Class**
00=PROFILE
10=SMART

**Series**
LLT30xx

### Laser options*

| | | |
|---|---|---|
| | /SI | Hardware switch-off of the laser line |
| | /3R | Increased laser power (class 3R) e.g., for dark surfaces |
| | /BL | Blue laser line (405 nm) for (semi-) transparent, red-hot glowing and organic materials (Measuring ranges 25 - 100 mm) |

### Cable outlet options*

| | | |
|---|---|---|
| | /RT | Cable outlet on the rear side ("Rear Tail") for space-saving installation, cable length 0.3 m. Sockets at cable end (Measuring ranges 25 - 200 mm) |
| | /PT | Cable directly out of the sensor ("Pigtail") Available lengths: 0.3 / 0.6 / 1.00 m |

*Options can be combined

Accessories from page 39

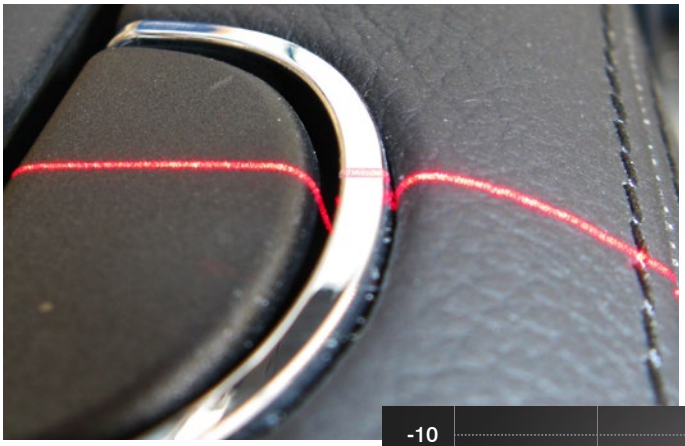

**Innovative exposure control to master difficult surfaces**
On inhomogeneous or dark surfaces, the HDR (High Dynamic Range) data acquisition mode and the improved auto exposure optimizes the measurement results.

In HDR mode, the rows of the sensor matrix are exposed differently but at the same time which avoids time offsets between the recordings. This is how moving objects can be detected reliably. The areas for auto-exposure can also be selected individually.

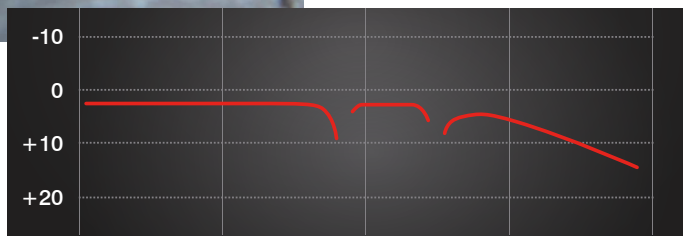


High resolution

High dynamic range

High speed

**Fast measurement results with operation modes**
Choose from three predefined operating modes for your specific measurement task: "High-Resolution" for maximum precision, "High Dynamic Range" for optimal profile detection on difficult surfaces and "High Speed" for ultra-fast measurements.

## Large measurement area up to 600 x 600 mm

The scanCONTROL 30x0 laser scanners are now also available with a large measuring field up to 600 x 600 mm. This allows measuring objects to be detected with high accuracy.

## Application examples

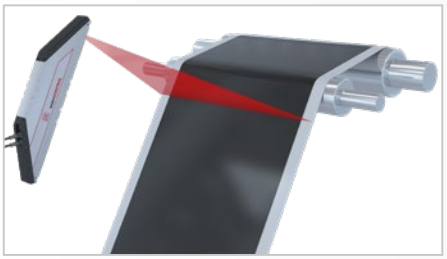
Planarity of coated battery film

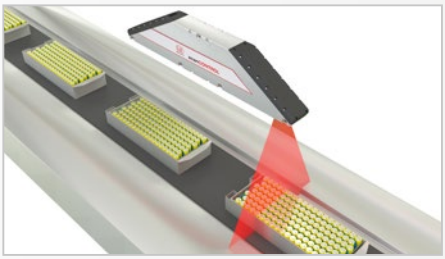
Assembly monitoring of battery packs

Inline 3D inspection of tire geometry

# High performance laser scanner
# scanCONTROL 30x0

| Model | | LLT30x0-25 | LLT30x0-50 | LLT30x0-100 | LLT30x0-200 |
|---|---|---|---|---|---|
| Measuring range (z-axis) | Start of measuring range | 77.5 mm | 105 mm | 200 mm | 200 mm |
| | Mid of measuring range | 85 mm | 125 mm | 270 mm | 310 mm |
| | End of measuring range | 92.5 mm | 145 mm | 340 mm | 420 mm |
| | Height of measuring range | 15 mm | 40 mm | 140 mm | 220 mm |
| Extended measuring range (z-axis) | Start of measuring range | - | - | 190 mm | 160 mm |
| | End of measuring range | - | - | 360 mm | 460 mm |
| Line linearity (z-axis) [1] [2] | | 1.5 µm | 3 µm | 9 µm | 26 µm |
| | | ± 0.01 % | ± 0.0075 % | ± 0.006 % | ± 0.012 % |
| Measuring range (x-axis) | Start of measuring range | 23 mm | 43.3 mm | 75.6 mm | 130 mm |
| | Mid of measuring range | 25 mm | 50 mm | 100 mm | 200 mm |
| | End of measuring range | 26.8 mm | 56.5 mm | 124.4 mm | 270 mm |
| Extended measuring range (x-axis) | Start of measuring range | - | - | 72.1 mm | 100 mm |
| | End of measuring range | - | - | 131.1 mm | 290 mm |
| Resolution (x-axis) | | 2,048 points/profile | | | |
| Profile frequency | | up to 10,000 Hz | | | |
| Interfaces | Ethernet GigE Vision | Output of measurement values<br>Sensor control<br>Profile data transmission | | | |
| | Digital inputs | Mode switching<br>Encoder (counter)<br>Trigger | | | |
| | RS422 (half-duplex) [3] | Output of measurement values<br>Sensor control<br>Trigger<br>Synchronization | | | |
| Output of measurement values [4] [5] | | Ethernet (UDP / Modbus TCP); RS422 (ASCII / Modbus RTU)<br>Analog; switch signal<br>PROFINET; EtherCAT; EtherNet/IP | | | |
| Control and indicator elements | | 3x color LEDs for laser, data and error | | | |
| Light source | Red Laser | ≤ 10 mW | | | ≤ 12 mW |
| | | Standard: laser class 2M, semiconductor laser 658 nm | | | |
| | | ≤ 30 mW | | ≤ 50 mW | |
| | | Option: laser class 3R, semiconductor laser 658 nm | | | |
| | Blue laser | ≤ 10 mW | | | - |
| | | Standard: laser class 2M, semiconductor laser 405 nm | | | - |
| Laser switch-off | | via software, hardware switch-off with /SI option | | | |
| Aperture angle of laser line | | 23 ° | 28 ° | 30 ° | 45 ° |
| Permissible ambient light | (fluorescent light) [1] | 10,000 lx | | | |
| Protection class (DIN EN 60529) | | IP67 (when connected) | | | |
| Vibration (DIN EN 60068-2-27) | | 2g / 20 ... 500 Hz | | | |
| Shock (DIN EN 60068-2-6) | | 15g / 6 ms | | | |
| Temperature range | Storage | -20 ... +70 °C | | | |
| | Operation | 0 ... +45 °C | | | |
| Weight | | 415 g (without cable) | | | |
| Supply voltage | | 11 … 30 VDC, nominal value 24 V, 500 mA, IEEE 802.3af class 2, Power over Ethernet (PoE) | | | |

[1] Based on the measuring range; measuring object: Micro-Epsilon standard object
[2] According to a one-time averaging across the measuring field (2,048 points)
[3] RS422 interface, programmable either as serial interface or as input for triggering/synchronization
[4] Analog | switching signal: Only in conjunction with 2D/3D output unit
[5] PROFINET | EtherCAT | EtherNet/IP: Only in conjunction with 2D/3D gateway

| Model | | LLT30x0-430 | LLT30x0-600 |
|---|---|---|---|
| Measuring range (z-axis) | Start of measuring range | 330 mm | 530 mm |
| | Mid of measuring range | 515 mm | 770 mm |
| | End of measuring range | 700 mm | 1 010 mm |
| | Height of measuring range | 370 mm | 480 mm |
| Extended measuring range (z-axis) | Start of measuring range | 330 mm | 450 mm |
| | End of measuring range | 720 mm | 1 050 mm |
| Line linearity (z-axis) [1] [2] | | 12 µm | 15 µm |
| | | ± 0.0032 % | ± 0.0031 % |
| Measuring range (x-axis) | Start of measuring range | 324 mm | 456 mm |
| | Mid of measuring range | 430 mm | 600 mm |
| | End of measuring range | 544 mm | 762 mm |
| Extended measuring range (x-axis) | Start of measuring range | 324 mm | 408 mm |
| | End of measuring range | 560 mm | 788 mm |
| Resolution (x-axis) | | 2,048 points/profile | |
| Profile frequency | | up to 10,000 Hz | |
| Interfaces | Ethernet GigE Vision | Output of measurement values<br>Sensor control<br>Profile data transmission | |
| | Digital inputs | Mode switching<br>Encoder (counter)<br>Trigger | |
| | RS422 (half-duplex) [3] | Output of measurement values<br>Sensor control<br>Trigger<br>Synchronization | |
| Output of measurement values [4] [5] | | Ethernet (UDP / Modbus TCP); RS422 (ASCII / Modbus RTU)<br>Analog; switch signal<br>PROFINET; EtherCAT; EtherNet/IP | |
| Control and indicator elements | | 3x color LEDs for laser, data and error | |
| Light source | Red Laser | ≤ 26 mW | |
| | | Standard: laser class 2M, semiconductor laser 660 nm | |
| | | ≤ 100 mW | |
| | | Option: laser class 3B, semiconductor laser 660 nm | |
| Laser switch-off | | via software, hardware switch-off with /SI option | |
| Aperture angle of laser line | | 60 ° | |
| Permissible ambient light | (fluorescent light) [1] | 5,000 lx | |
| Protection class (DIN EN 60529) | | IP67 (when connected) | |
| Vibration (DIN EN 60068-2-27) | | 2g / 20 ... 500 Hz | |
| Shock (DIN EN 60068-2-6) | | 15g / 6 ms | |
| Temperature range | Storage | -20 ... +70 °C | |
| | Operation | 0 ... +45 °C | |
| Weight | | 2630 g (without cable) | |
| Supply voltage | | 11 … 30 VDC, nominal value 24 V, 500 mA, IEEE 802.3af class 2, Power over Ethernet (PoE) | |

[1] Based on the measuring range; measuring object: Micro-Epsilon standard object
[2] According to a one-time averaging across the measuring field (2,048 points)
[3] RS422 interface, programmable either as serial interface or as input for triggering/synchronization
[4] Analog | switching signal: Only in conjunction with 2D/3D output unit
[5] PROFINET | EtherCAT | EtherNet/IP: Only in conjunction with 2D/3D gateway

# Options
# scanCONTROL 30xx

## Option /RT = "Rear Tail"

**Cable outlet on the rear side ("Rear Tail") for space-saving installation**

- Available for the measuring ranges from 25 mm to 200 mm
- 30 cm pigtail
- Reduces the installation height by 47%

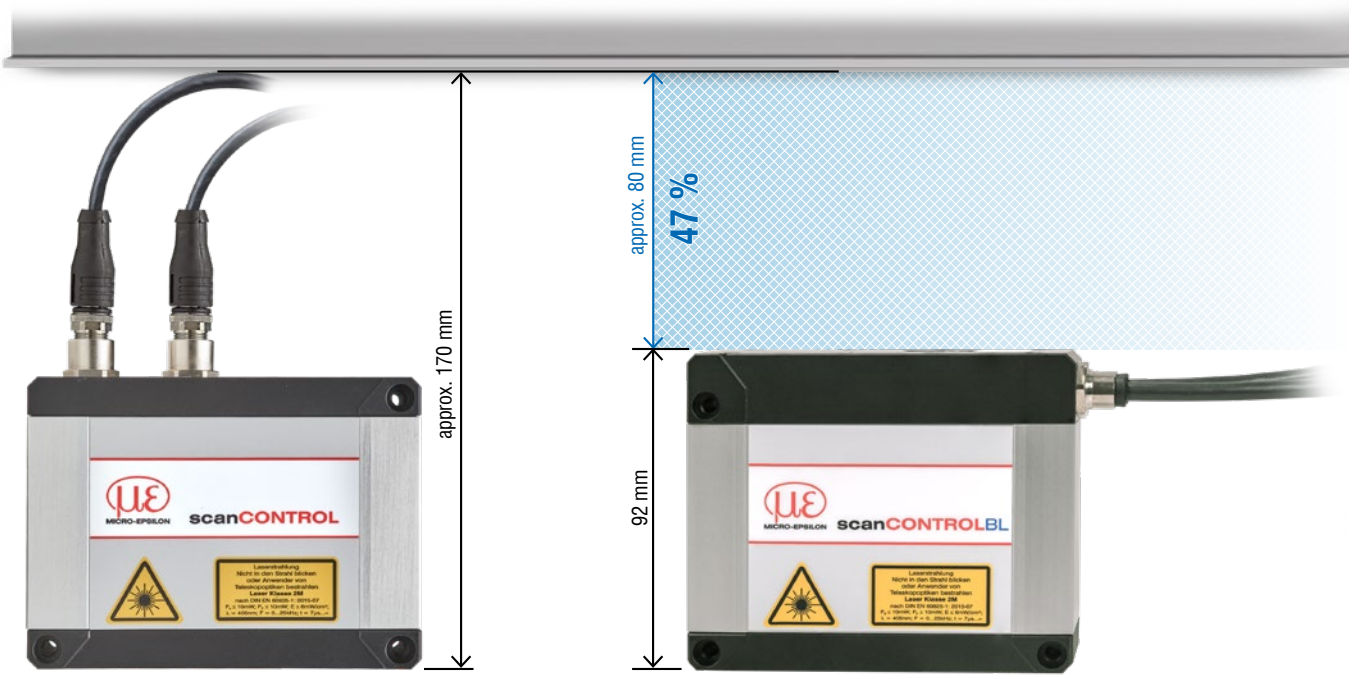


Standard

Option /RT

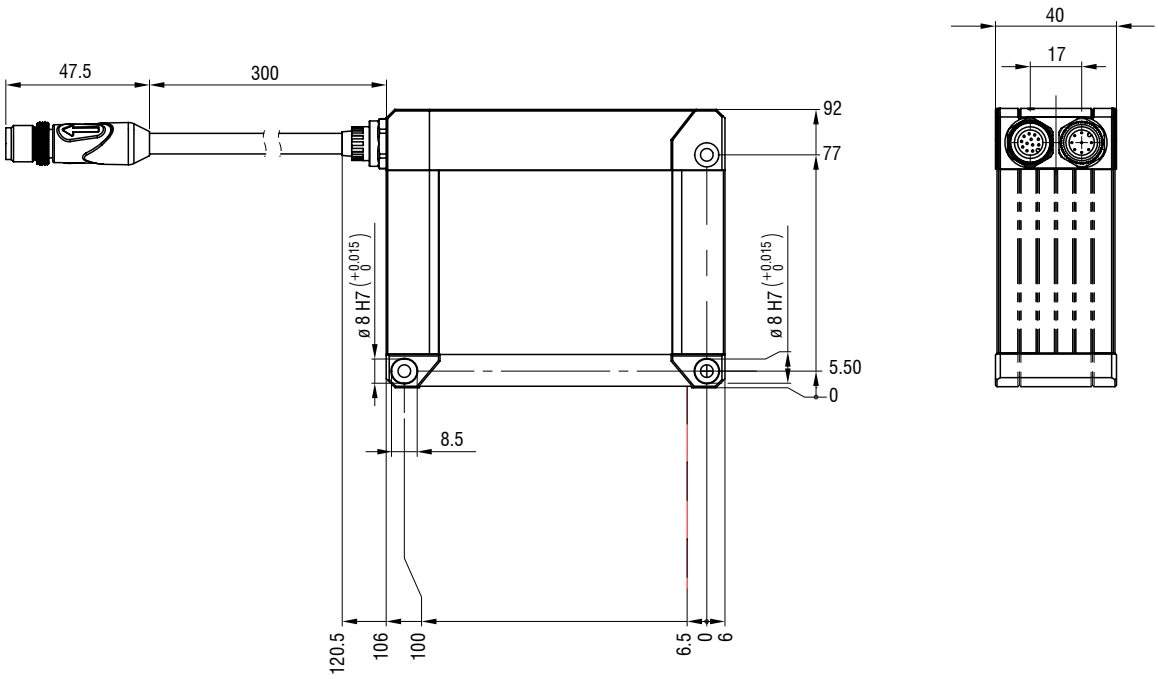


(dimensions in mm, not to scale)

# Dimensions and measuring ranges
# scanCONTROL 30xx

## LLT30x2-25 / LLT30x0-25

Red Laser Blue Laser

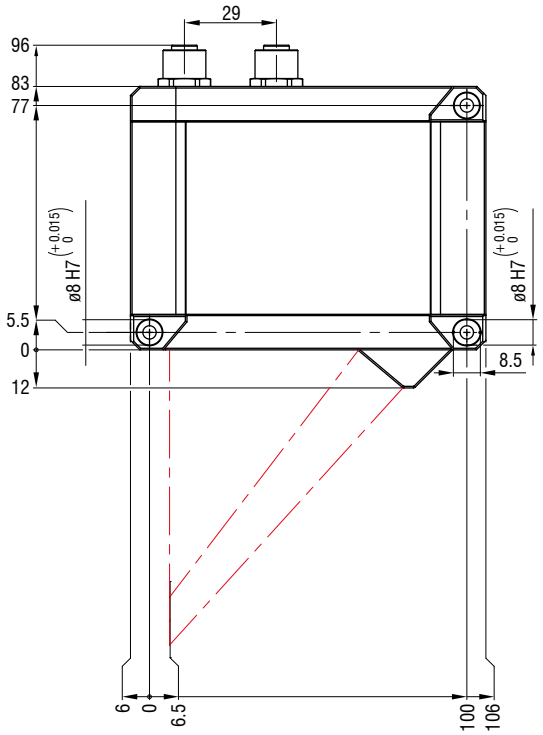


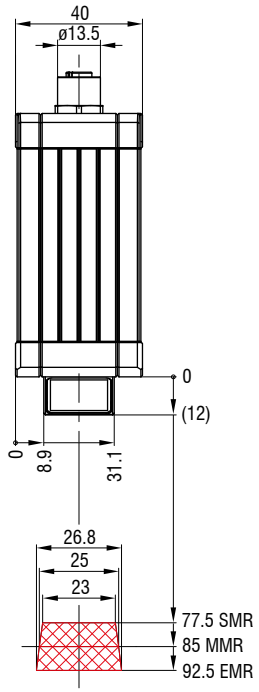


## LLT30x2-50 / LLT30x0-50

Red Laser Blue Laser

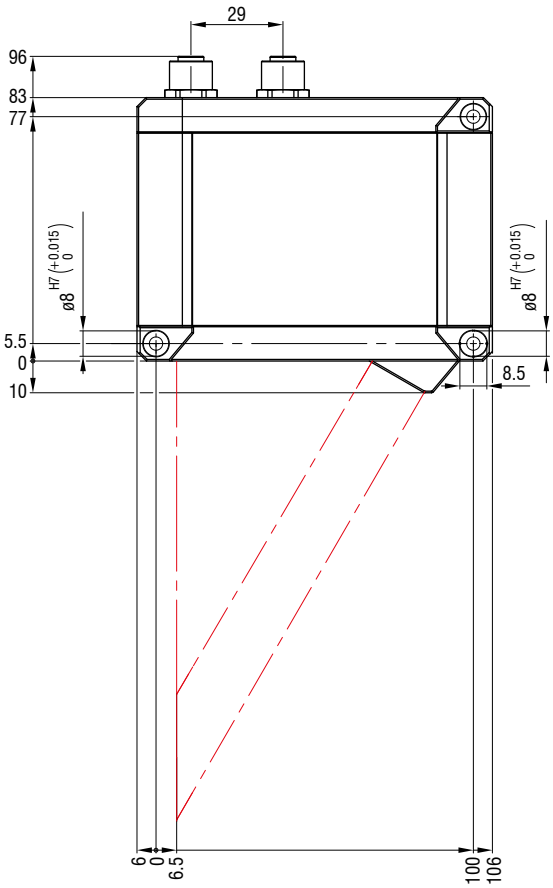


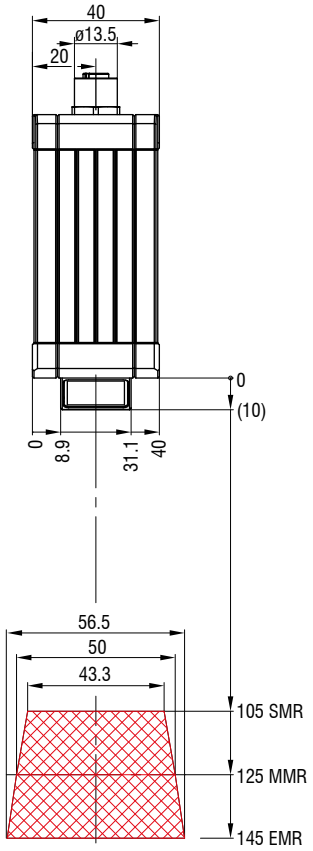


(dimensions in mm, not to scale)

# Dimensions and measuring ranges
## scanCONTROL 30xx

### LLT30x2-100 / LLT30x0-100

Red Laser Blue Laser

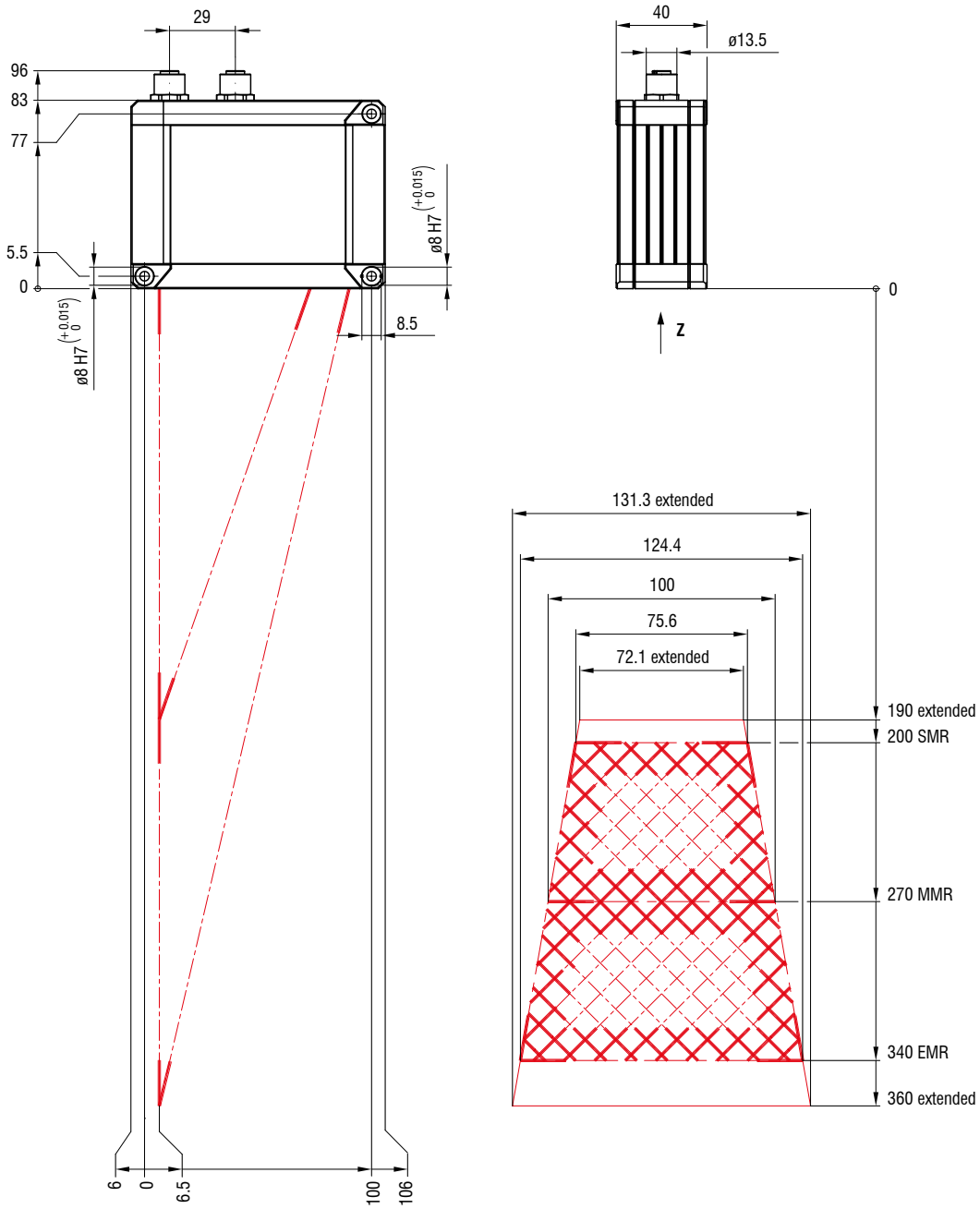


(dimensions in mm, not to scale)

## LLT30x2-200 / LLT30x0-200

Red Laser

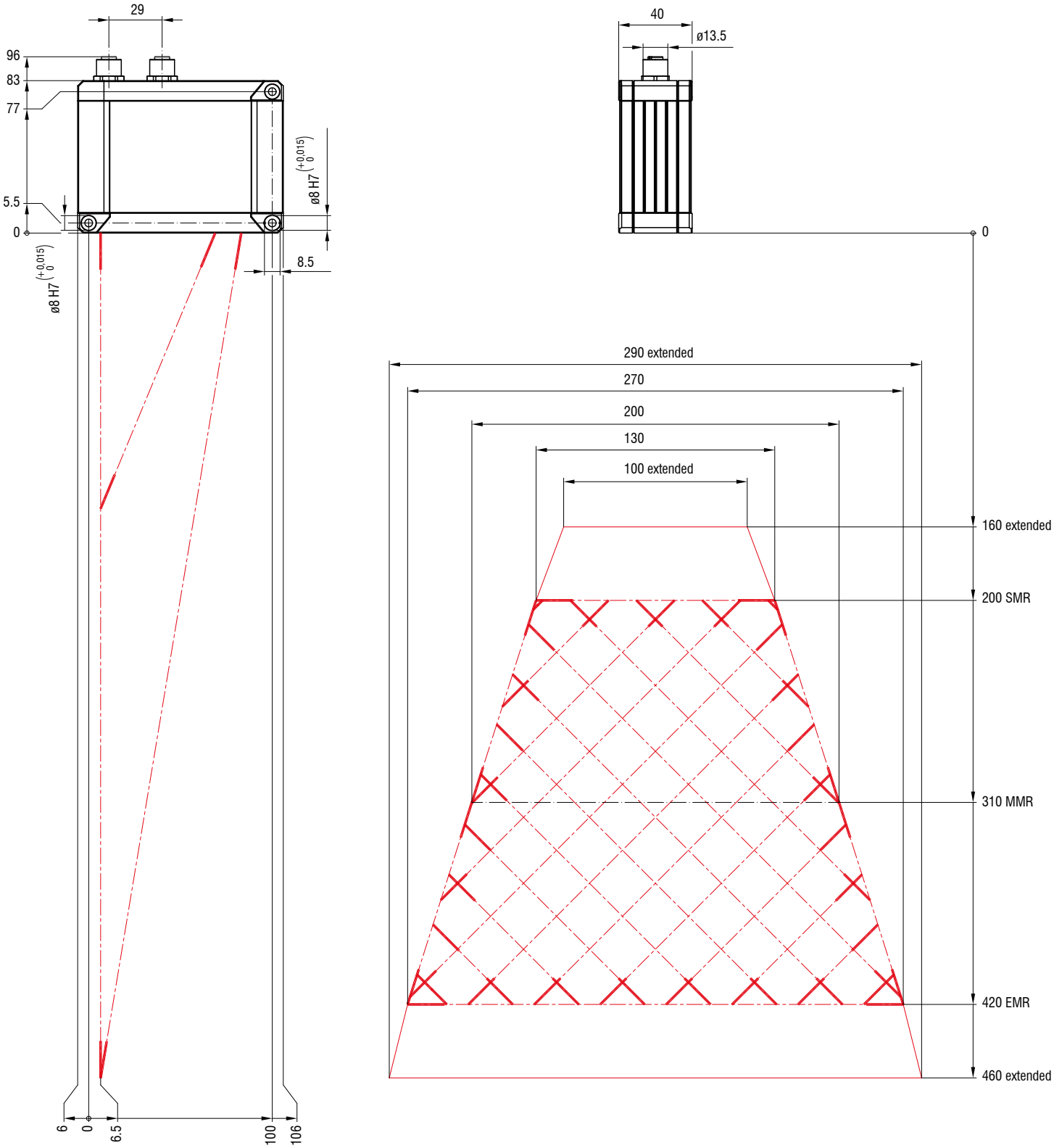


(dimensions in mm, not to scale)

# Dimensions and measuring ranges
# scanCONTROL 30xx

## LLT30x2-430 / LLT30x0-430

Red Laser

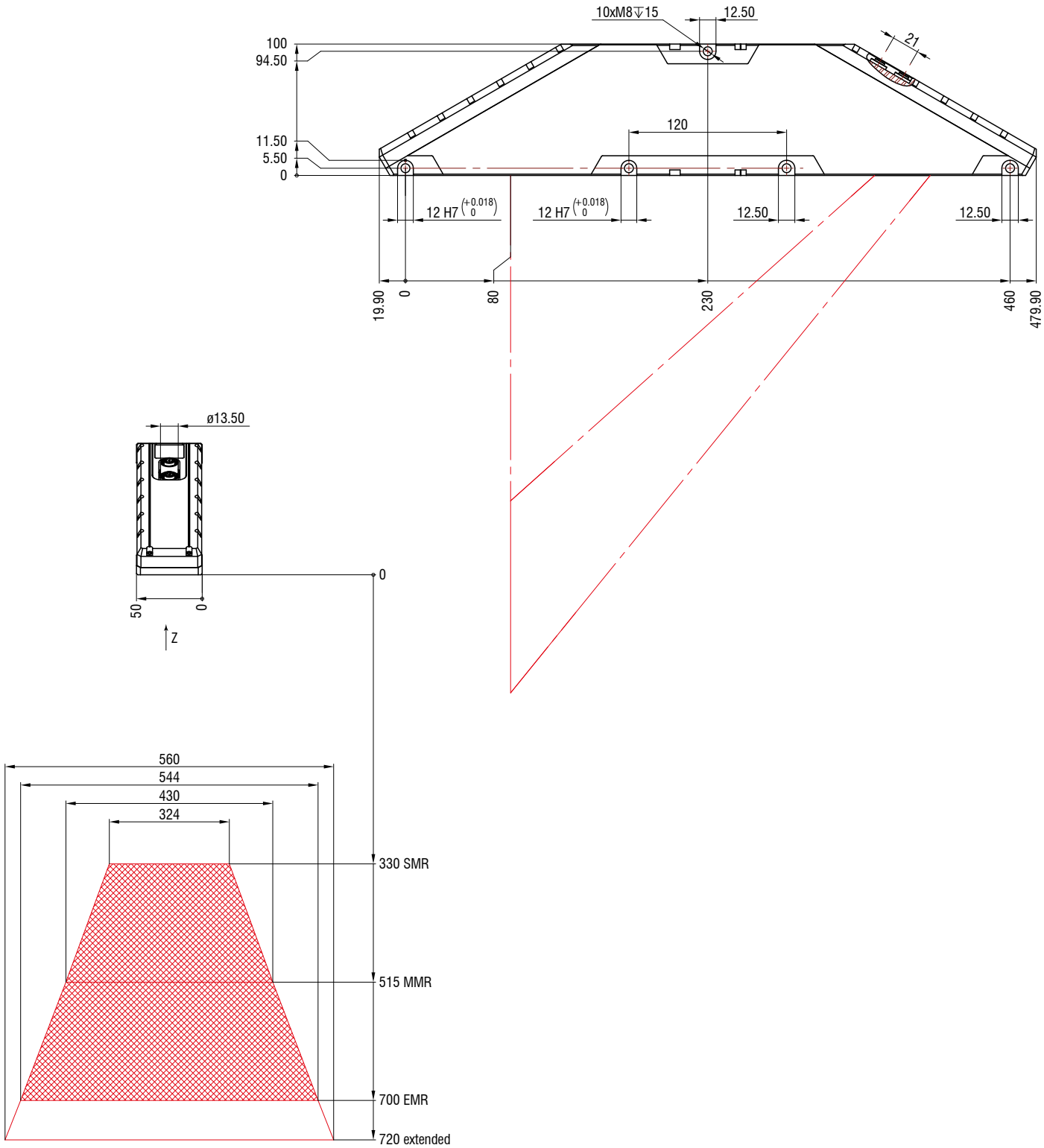


(dimensions in mm, not to scale)

## LLT30x2-600 / LLT30x0-600

Red Laser

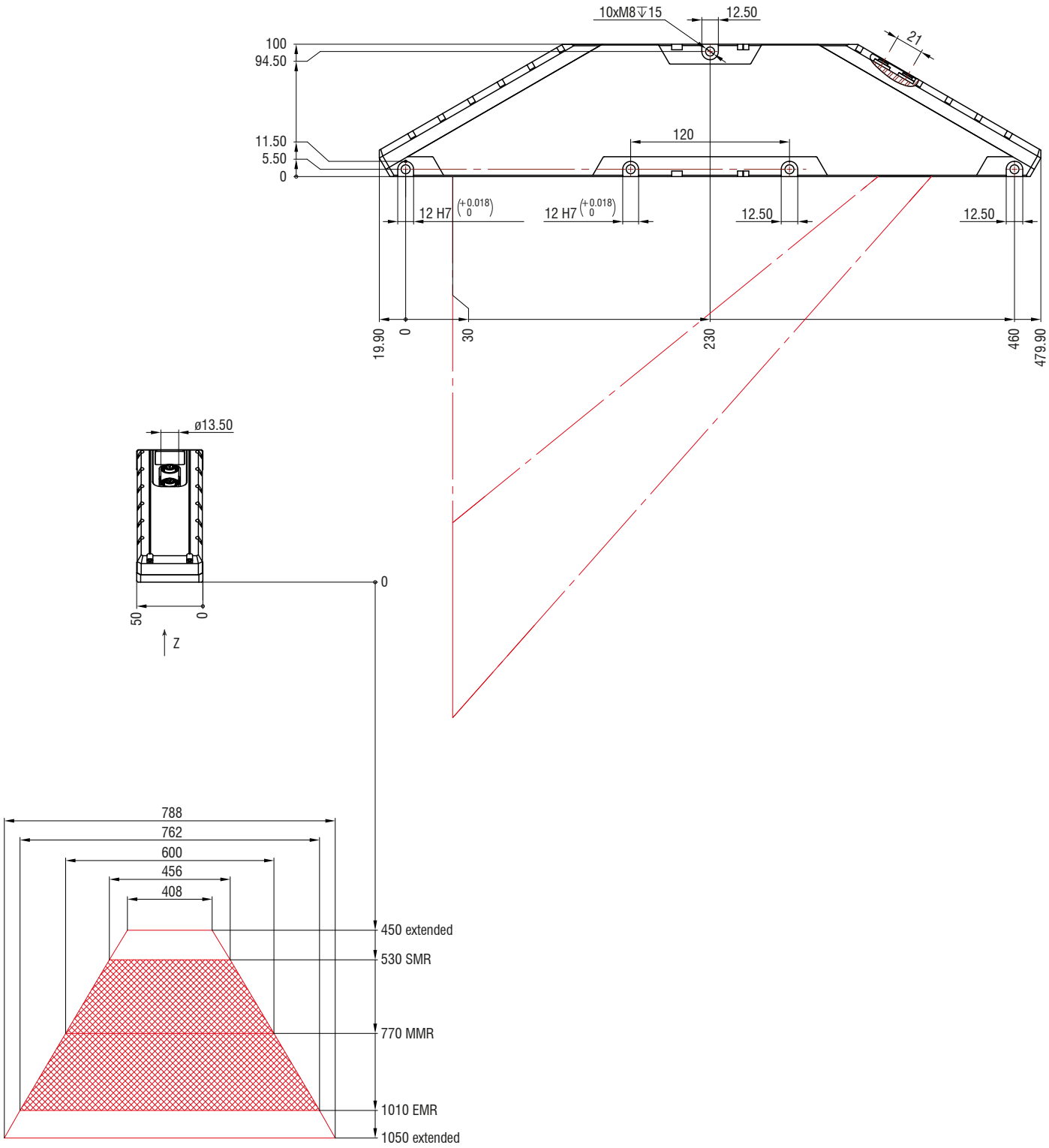


(dimensions in mm, not to scale)

# Software and integration
# scanCONTROL

micro-epsilon.com/
scanner/download

## Software for scanCONTROL SMART sensors

SMART

### scanCONTROL Configuration Tools
*Solution of complex 2D measurement tasks*

- Can be used with all SMART sensors
- Sensor alignment and adjustment
- 16 measuring programs x 8 evaluations per parameter set
- 15 independent parameter packages can be stored in the sensor
- Data processing
- Logical operations for digital outputs
- Configuration of the measurement value transfer and the outputs

### scanCONTROL Result Monitor
*Visualization of measurement sequences*

- For up to 4 scanCONTROL SMART sensors
- Display of profile and measured value history during operation
- Adjustable layout (different views, e.g. for workers)
- Parallel transmission of the measured values to the control unit is possible and recommended
- Logging and saving of profiles

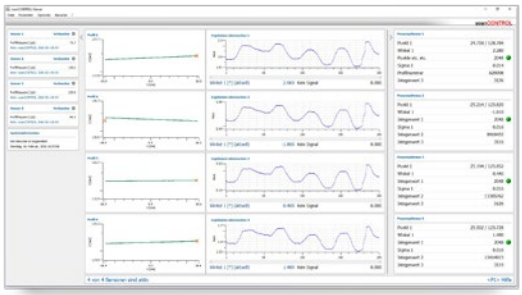

### scanCONTROL UDP Tool
*Testing the UDP output of measured values*

- For all scanCONTROL SMART sensors
- Logging possible up to 1,000 Hz
- Source code available

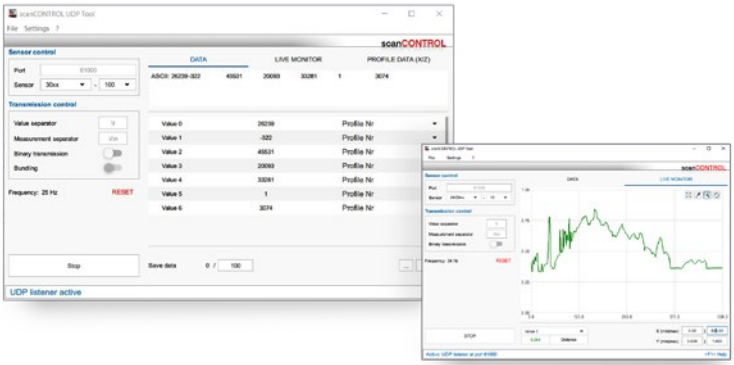

### scanCONTROL Modbus Tool
*Testing the Modbus communication*

- For all scanCONTROL SMART sensors
- Transfer of measured data
- Sensor control via Modbus TCP
  (load user modes, laser on/off, change exposure time, ...)

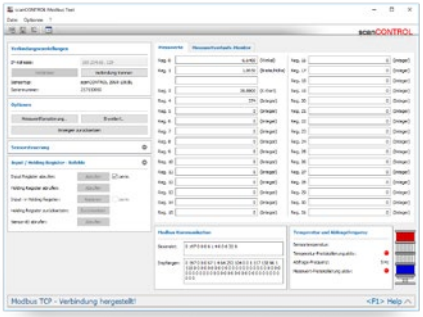

# Integration of scanCONTROL sensors

SMART PROFILE

## Integration into customer software

- LLT.DLL and SDK for fast integration in /C++ or C# (NET) applications
- LabVIEW device driver
- Various example VIs (profile transmission, container mode, ...)
- Comprehensive documentation
- Linux integration
  - Based on GigE Vision/GenICam API
  - Fast integration via additional C++ library
  - Various sample programs
  - Comprehensive documentation
- Cognex VisionPro
  - AIK adapter for fast integration via Cognex AIK server
  - Cognex Range Images can be generated and processed based on the scanCONTROL measuring points
- Others on request

## scanCONTROL Developer Tool

*Complete integration example (demo tool)*

- Source code available (QML / C++, usable for Windows and Linux)
- Serves as support for the development of own software with scanCONTROL sensors
- MouseOver over the sensor parameters directly displays the corresponding function in the LLT.DLL
- All data transmission options can be set and tested

## Integration into image processing software

*Easy integration due to GenICam/GigE Vision standard*

- Direct connection to compatible 3D and image processing software possible
- Sensor is recognized by the standard and parameters are read out directly
- scanCONTROL 25/29xx: output in 2.5D
- scanCONTROL 30xx: output in Valid3D (corresponds to coord3D data formats)

*Easy integration due to GigE Vision standard*

- 3D comparisons and measurement
- Integration into various software solutions via GigE Vision possible
- Detection of fine surface defects
- OCR/text recognition independent of contrast
- Completeness, position detection, planarity, ... and much more!

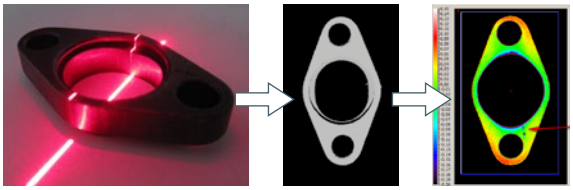

Profile acquisition | Grayscale image | Image processing software

# Software
# 3DInspect

- Intuitive user interface
- Real 3D evaluation, not just 2.5D
- Object extraction in 3D
- Direct feedback with algorithms
- Compatible with all 3D sensors from Micro-Epsilon

3DInspect

**3DInspect software for 3D measurement and inspection tasks**

The 3DInspect software is a powerful tool for sensor parameter set up and industrial measurement tasks. This software transmits the measurement data from the sensor via Ethernet and provides the data in three-dimensional form. The 3D data is then further processed on the PC using 3DInspect measurement programs, evaluated, assessed and, if necessary, logged and transmitted to a control unit via Ethernet. The 3D data can also be saved with the software. In addition to the scanCONTROL 30xx models, the 3DInspect software is also supported by the 3D Profile Unit and the surfaceCONTROL and reflectCONTROL sensors.

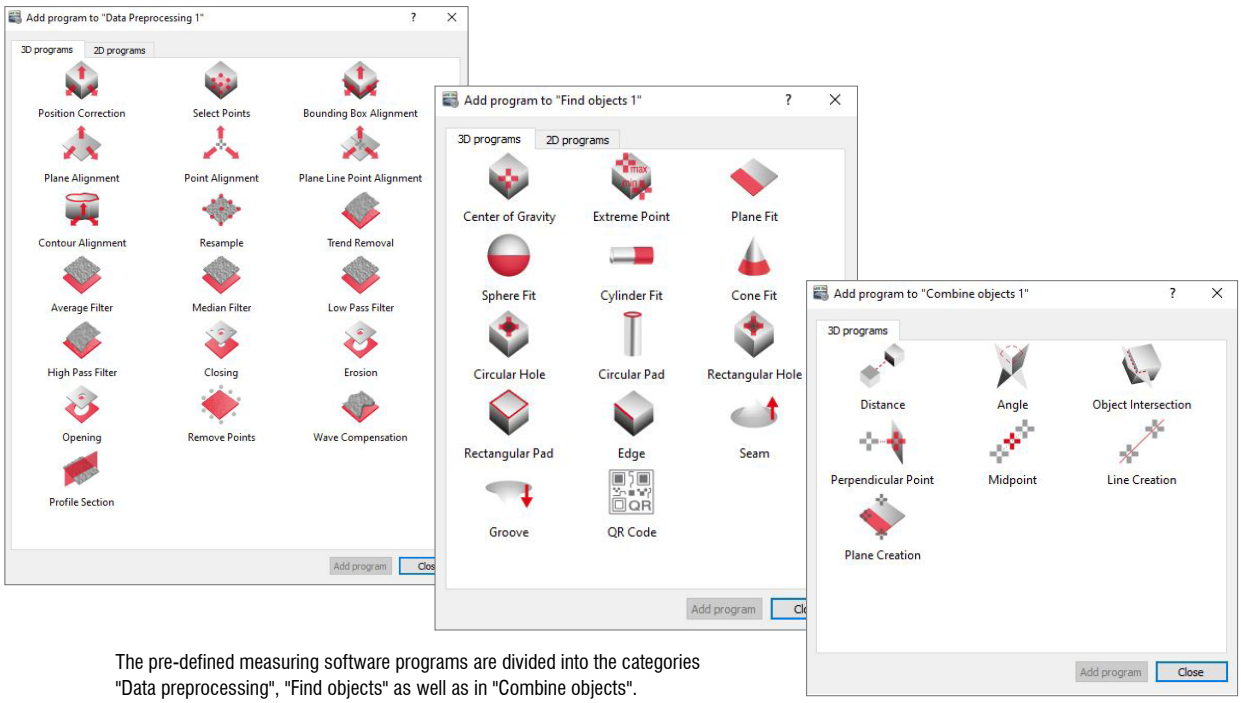


The pre-defined measuring software programs are divided into the categories "Data preprocessing", "Find objects" as well as in "Combine objects".

**Industrial Performance Unit:**
**Industrial PC with GigE Vision Sensors**
The Industrial Performance Unit is a powerful computing platform for 3D applications. The scanner can be parameterized directly via the 3DInspect software, allowing measurements to be started immediately. Results can be output via the integrated interfaces RPOFINET, EtherCAT and EtherNet/IP.

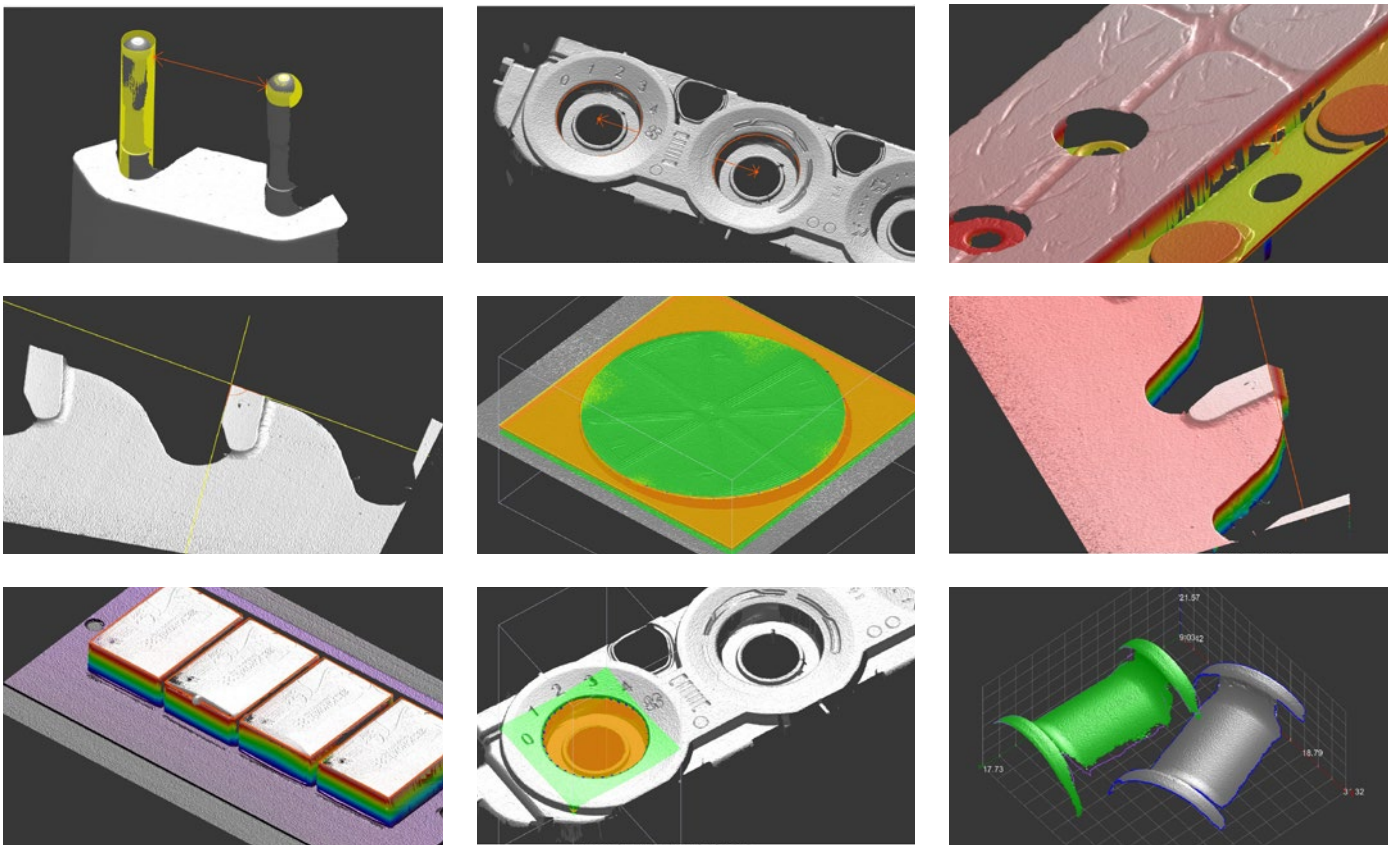

**Valid3D technology from Micro-Epsilon vs. conventional 2.5D systems**
The unique Valid3D technology enables lossless display and processing of the point clouds. This is how scanned 3D objects can be moved arbitrarily in the coordinate system.

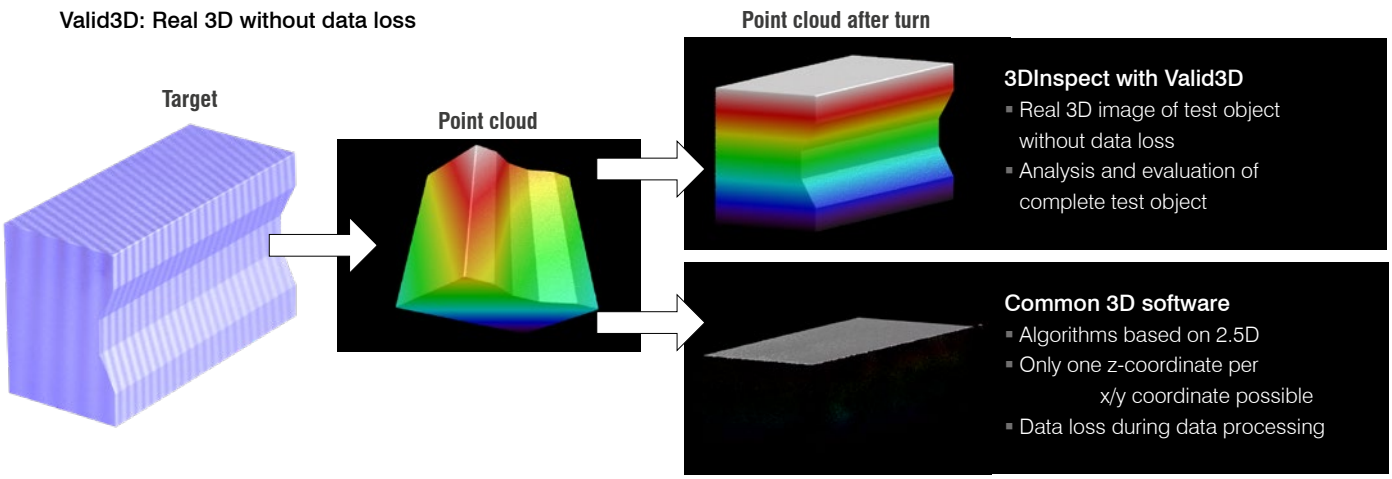

# System for multi-scanner applications
# 3D Profile Unit

micro-epsilon.com/3DPU

## Profile stitching for up to 2 sensors

**3D Profile Unit Controller**

Powerful industrial computer

- Communication with any GigE Vision clients
- Direct integration into image processing software
- Transfer of profile data or 3D point clouds
- Data evaluation and system parameterization is implemented in the 3DInspect software
- Optionally available with Industrial Ethernet:
  - Integrated evaluation
  - Transfer of measured values to PLC
  - Industrial Ethernet interface for control and transfer of measured values

SMART PROFILE

PROFINET EtherCAT EtherNet/IP Modbus

**Application examples:**

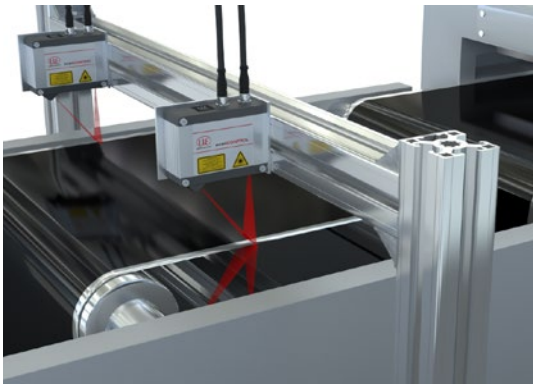

Width, thickness and Heavy Edge of battery film



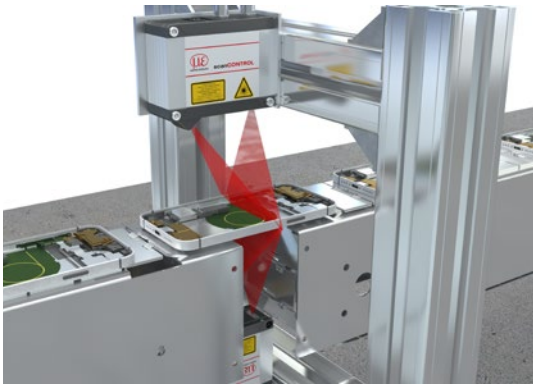

Thickness of smartphone carrier plates

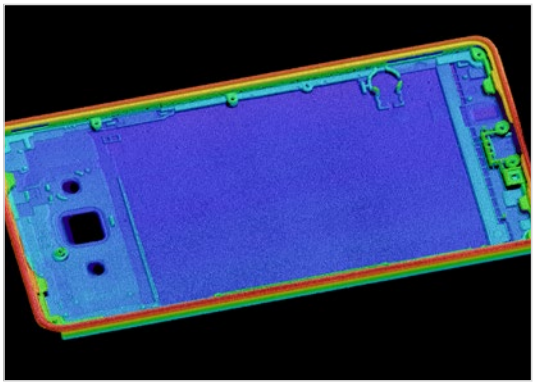

Stitched 3D point cloud of the smartphone carrier plate in 3DInspect

## 2D/3D Gateway

**PROFINET / EtherCAT / EtherNet/IP for all SMART scanners**

One 2D/3D Gateway is connectable with up to 4 sensors. Operation of more than one sensor requires a switch. The 2D/3D Gateway communicates with the scanCONTROL SMART sensor via Ethernet Modbus. The resultant values are then converted to PROFINET, EtherCAT or EtherNet/IP. The customer carries out the parameter setup with a detailed instruction manual. The gateway can also be parameterized in advance at the factory.

### Models

| | | |
|---|---|---|
| 6414142 | 2D/3D Gateway | Fieldbus coupler, configurable for PROFINET, EtherNet/IP and EtherCAT |
| 6414142.001 | 2D/3D Gateway, pre-parameterized, | Pre-parameterized to customer log and IP addresses |

| Number of sensors on the gateway | Maximum measurement frequency |
|---|---|
| 1 | 500 Hz |
| 2 | 500 Hz |
| 3 | 330 Hz |
| 4 | 250 Hz |

**NEW**

Higher measurement frequencies are also possible with the 30xx series due to the Modbus bundling option.

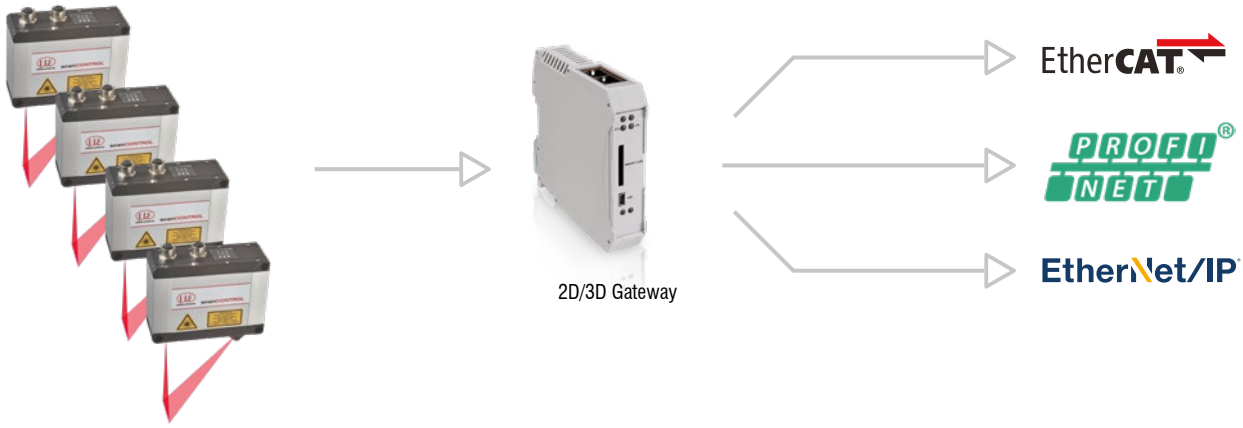


## 2D/3D Output Unit

**Analog signals / digital switch signals for all SMART scanners**

The 2D/3D Output Unit is addressed via Ethernet and outputs analog and digital signals. Different output terminals can be connected to the fieldbus coupler.

### Models

| | | |
|---|---|---|
| 6414073 | 2D/3D Output Unit Basic/ET | Fieldbus coupler with filter module and bus end terminal |
| 0325131 | OU-DigitalOut/8-channel/DC24V/0.5A/negative | 8-channel digital output terminal; DC 24 V; 0.5 A; negative switching |
| 0325115 | OU-DigitalOut/8-channel/DC24V/0.5A/positive | 8-channel digital output terminal; DC 24 V; 0.5 A; positive switching |
| 0325116 | OU-AnalogOut/4-channel/±10 V | 4-channel analog output terminal; ±10 V |
| 0325135 | OU-AnalogOut/4-channel/0-10 V | 4-channel analog output terminal; 0-10 V |
| 0325132 | OU-AnalogOut/4-channel/0-20 mA | 4-channel analog output terminal; 0-20 mA |
| 0325133 | OU-AnalogOut/4-channel/4-20 mA | 4-channel analog output terminal; 4-20 mA |

Other terminals available on request.

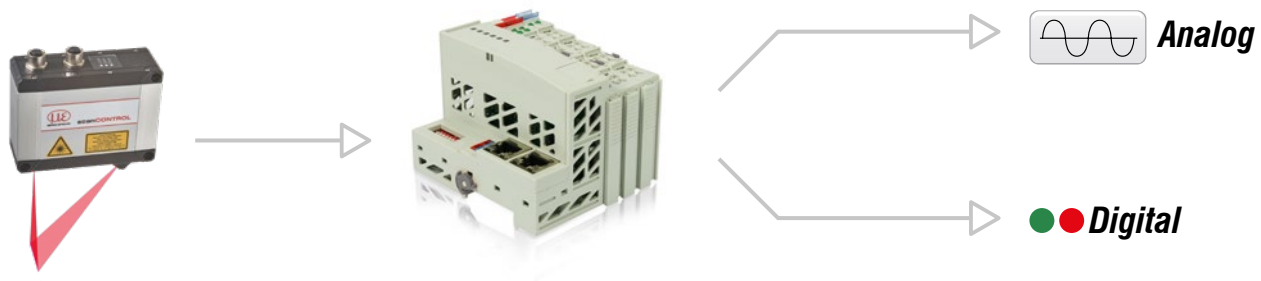

## Housings for protection and cooling for LLT30xx

for the measuring ranges 25 - 200 mm

### Protective housing with blow-out system

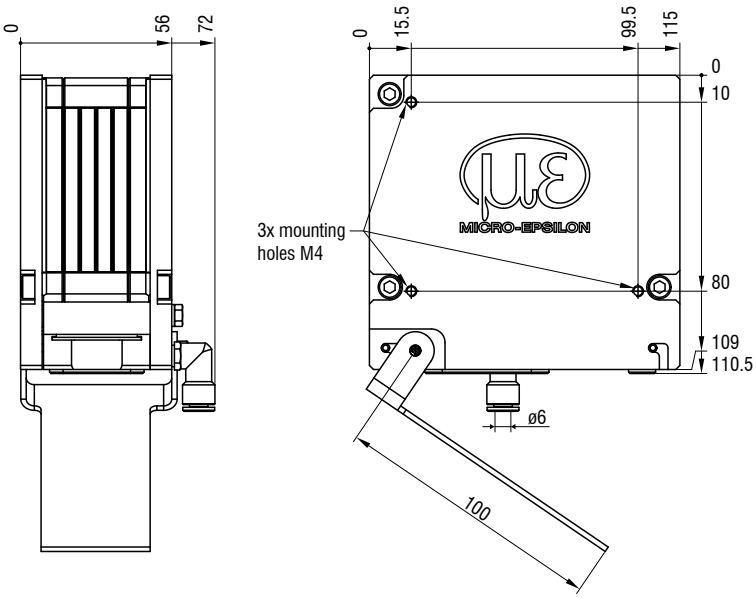


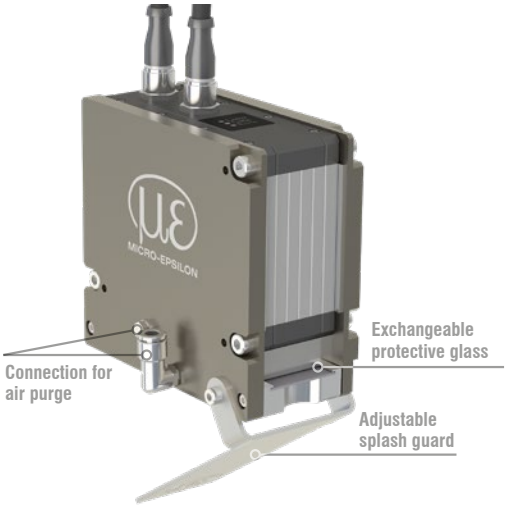


### Protective housing with blow-out system and water cooling

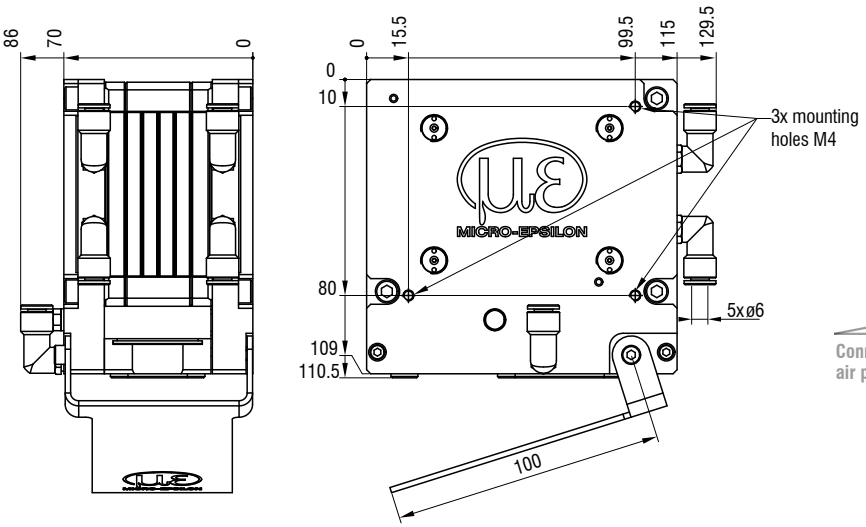


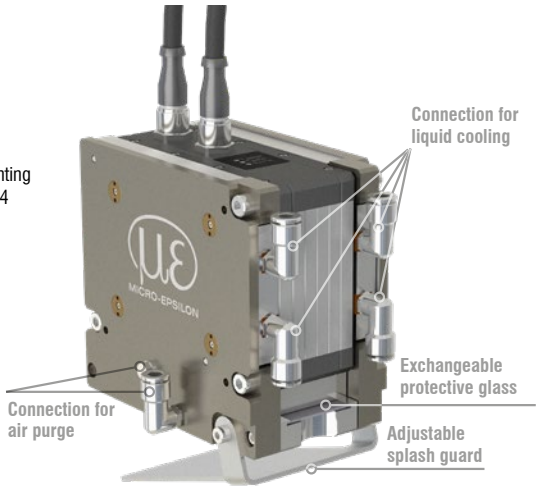


| Art. no. | Model | Description |
|---|---|---|
| 2105076 | Protective housing for LLT30 | Adaptive protective housing for LLT30 |
| 2105077 | Protective cooling housing for LLT30 | Adaptive protective and cooling housing for LLT30 |
| 0755083 | Exchangeable glass for protective housing LLT30 | Exchangeable glass for protective / cooling concept LLT30, pack of 30 pieces |

## Connection cables

### PCR3000-x Multi-function cable

Cable for power supply, digital inputs (TTL or HTL),
RS422 (half-duplex);
suitable for drag chains and robots
Cable length (m): 2 / 5 / 10 / 15 / 20 / 25 / 35

### SCR3000A-x Ethernet connection cable

Cable for parameter setting, value and profile transmission;
suitable for drag chains and robots
Cable length (m): 0.5 / 2 / 5 / 10 / 15 / 20 / 25 / 35

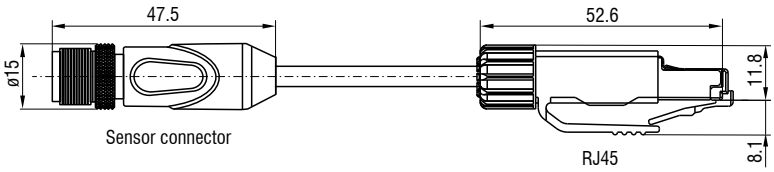


## Other accessories

| Art. no. | Model | Description |
|---|---|---|
| 0323478 | Connector/12-pin/Multifunction for LLT25/29/30 series | Plug for multifunction port |
| 0323479 | Connector/8-pin/Ethernet for LLT25/29/30 series | Plug for Ethernet socket |
| 2420067 | PS25/29/30 | Power supply unit for scanCONTROL |
| 0254111 | Case for LLT25/29/30 (up to MR 200) | Transport case for scanCONTROL sensors incl. measuring stand |
| 0254153 | Case for LLT30 series, MR 430/600 | Transport case for scanCONTROL sensors incl. measuring stand |
| 2960097 | Measuring stand for LLT25/26/29/30 series | Measuring stand with sensor adapter board, flexible rod and clamp base |
| 2960115 | Measuring stand for LLT30 series, MR 430/600 | Measuring stand with sensor adapter board, flexible rod and clamp base |

## Sensors and Systems from Micro-Epsilon

Sensors and systems for displacement, position and dimension

Sensors and measurement devices for non-contact temperature measurement

Measuring and inspection systems for quality assurance

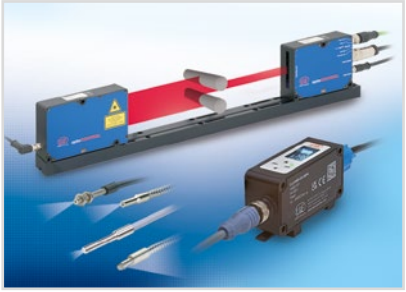

Optical micrometers, fiber optics, measuring and test amplifiers

Color recognition sensors, LED Analyzers and inline color spectrometers

3D measurement technology for dimensional testing and surface inspection

Modifications reserved / Y9761353-H022094GKE

MICRO-EPSILON

MICRO-EPSILON Headquarters
Koenigbacher Str. 15 · 94496 Ortenburg / Germany
Tel. +49 (0) 8542 / 168-0 · Fax +49 (0) 8542 / 168-90
info@micro-epsilon.com · **www.micro-epsilon.com**

Download catalog: