MICRO-EPSILON

More Precision

thermoIMAGER TIM // Compact thermal imaging cameras

- *Temperature range from -20 °C to 1900 °C*
- *Compact cameras ideal for OEM applications*
- *Up to 1 kHz for fast processes*
- *Resolution up to 764 x 480 pixels*
- *License-free analysis software and complete SDK included*

thermoIMAGER TIM - compact USB thermal imaging cameras for precise thermography
Non-contact measurements of temperature distribution using thermal imaging cameras enable to efficiently monitor and control temperature-critical processes in various fields of application. The thermoIMAGER infrared cameras are renowned for stationary thermography providing an excellent price/performance ratio. They are connected via USB 2.0 to a computer and promptly ready for use. The license-free TIMConnect software visualizes and records the detected temperature data as thermal images. Additionally, the software provides set up and configuration and enables to control the infrared cameras.

Functioning principle of Micro-Epsilon thermal imaging cameras
Thermal imaging cameras from Micro-Epsilon are designed to measure surface temperatures from -20 °C to 1900 °C. The infrared radiation emitted by a body is used for the measurement. As this measurement is a non-contact technology, the devices perform wear-free and can therefore be reliably used in the long term. Selectable models and optical systems enable to install the cameras in different distances from the surface. This allows for the target to be measured from a safe distance in critical applications.

Page	Model	Description
4 - 5	TIM 160S	Miniature industrial thermal imaging camera
6 - 7	TIM QVGA / QVGA-HD	Thermal imaging camera with high resolution and sensitivity
8 - 9	TIM VGA	Worldwide smallest VGA thermal imaging camera
10 - 11	TIM M-1	Thermal imaging camera for hot metal surfaces
12 - 13	TIM M-1/M-08 Special models / Protection housings	Thermal imaging cameras with blocking filter and cooling enclosure for hot metal surfaces
14 - 15	USB Server Gigabit / Process interface	Simple cable extension and industrial process interface
16 - 17	TIM NetPCQ / NetBox	PC solution for applications and miniature PC
18 - 19	Software features / Lenses	Software TIMConnect / Suitable lenses for every application
20 - 23	Lenses	Suitable lenses for every application

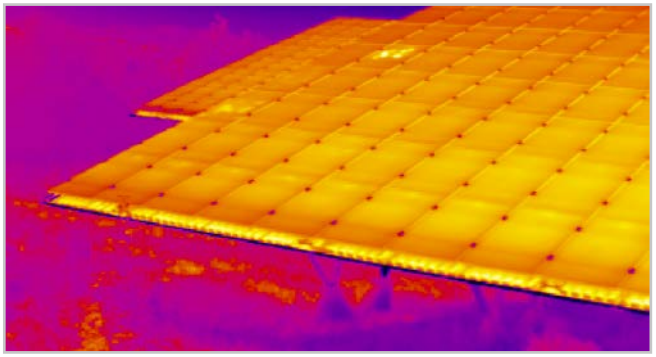

Fast temperature measurement even on large surfaces
Due to this non-contact technology, measurement objects can be detected precisely and wear-free. Large surfaces can be measured accurately at millisecond intervals. The camera can be operated in the line monitoring mode in order to continuously monitor the process.

Compact design for mobile and stationary use
The thermoIMAGER cameras close the previous gap between portable infrared snapshot cameras and devices for stationary use.
Exemplary fields of applications:
- Process automation
- Test stations
- Research & Development
- Mobile measurement tasks

License-free software
- Automatic process and quality control
- Individual alarm threshold settings depending on the respective process
- Analog and digital signal input
- External communication of software via COM ports, DLL and LabVIEW driver
- Compatible with Windows 7/10

Easy process integration via advanced interfaces
- USB cable extension up to 100 m (Ethernet)
- Process interface (PIF) as analog or digital input/output
- Serial data communication via RS232

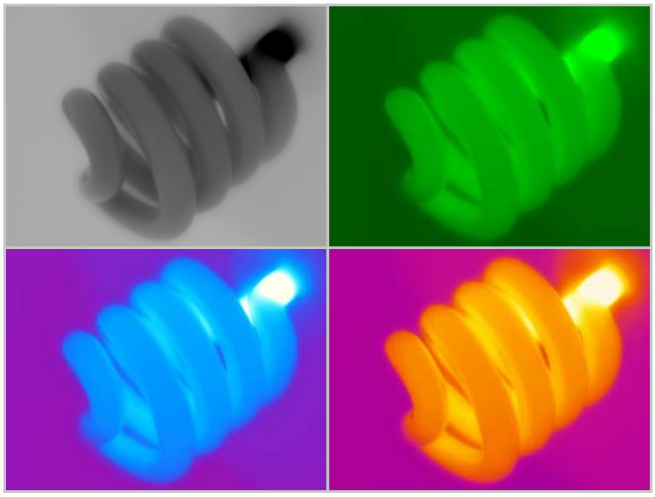

Large temperature measuring range
Thermal imaging cameras from Micro-Epsilon are suitable for use across a wide measuring range - from low temperatures prevalent in cooling chains or laboratories, to the highest temperatures in metal processing applications.

thermoIMAGER TIM VGA

Miniature infrared camera with VGA resolutions

- Thermography in VGA resolution
- 640 x 480 pixels
- Measuring range from -20 °C to 900 °C (special model up to 1500 °C)
- Radiometric video recording with 32 Hz,
  125 Hz in the subframe mode (640 x 120 pixels)
- Compact design (46 mm x 56 mm x 76 - 100 mm) with USB interface
- Lightweight (269 - 340 g, incl. lens)
- Exchangeable lenses & industrial accessories
- TIMConnect software delivered with Software Developer Kit

Software

- Display of the thermal image in real time (32 Hz)
  with recording function (video, snapshot)
- Complete set up of parameters and remote control of the camera
- Detailed analysis of fast, thermodynamic processes
- Output of analog temperature or alarm values via the process interface
- Digital communication via RS232 or DLL for software integration

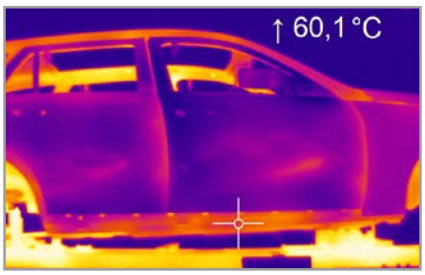

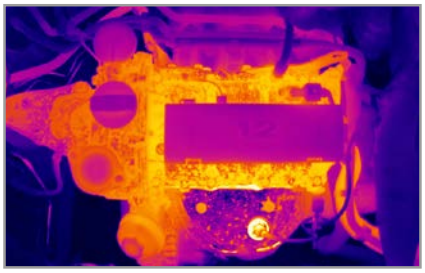

Razor-sharp infrared pictures and videos for
process optimization, e.g., in the automotive industry

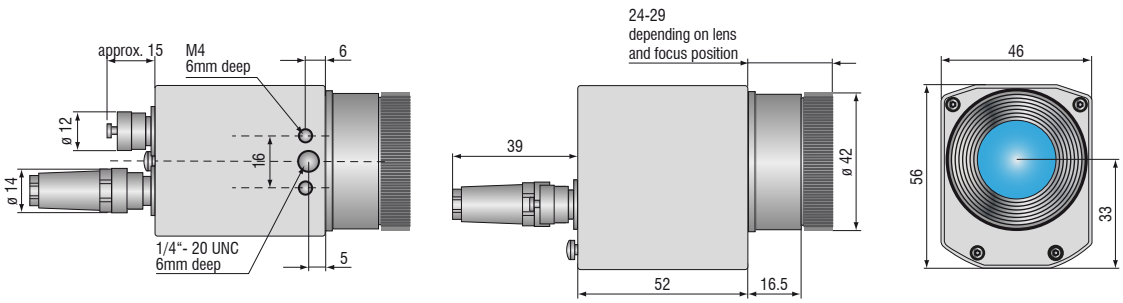

Model	TIM VGA
Optical resolution	640 x 480 pixels
Temperature ranges	-20 ... 100 °C, 0 … 250 °C, (20) 150 ... 900 °C [1] additional temperature range: 200 ... 1500 °C (optional)
Spectral range	8 to 14 µm
Frame rate	32 Hz / 125 Hz in the subframe mode (640 x 120 pixels)
System accuracy	±2 °C or ±2 %, whichever is greater
Lenses	15° x 11° FOV / f = 41.5 mm or 33° x 25° FOV / f = 18.7 mm or 60° x 45° FOV / f = 10.5 mm or 90° x 64° FOV / f = 7.7 mm
Thermal sensitivity (NETD)	40 mK with 33°, 60° and 90° 80 mK with 15°
Detector	FPA, uncooled (17 µm x 17 µm)
Outputs/digital	USB 2.0 / optional interface USB to GigE (PoE)
Standard process interface (PIF)	0 - 10 V input, digital input (max. 24 V), 0 - 10 V output
Industry process interface (PIF)	2x 0 - 10 V inputs, digital input (max. 24 V), 3x 0(4) - 20 mA outputs, 3x relays (0 - 30 V/ 400 mA), fail-safe relay
Cable length (USB)	1 m (standard), 5 m, 10 m 5 m and 10 m also available as high temperature USB cable (180 °C or 250 °C)
Power supply	USB powered
Tripod mount	¼-20 UNC
Protection class	IP67
Ambient temperature	0 ... 50 °C
Storage temperature	-40 ... 70 °C
Relative humidity	20 to 80 %, non-condensing
Vibration	IEC 60068-2-6 (sinus-shaped) / IEC 60068-2-64 (broadband noise)
Shock	IEC 60068-2-27 (25 g and 50 g)
Housing (size)	46 mm x 56 mm x 76 - 100 mm (depending on lens and focus position)
Weight	269 - 340 g

[1] For the range (20)150 up to 900 °C, the accuracy specification applies from 150 °C

Scope of supply

TIM VGA

- TIM process camera
  incl. a selectable lens
- Operating instructions
- USB cable 1 m
- Software for real-time processing
  and analyzing thermal images
- Tripod mount
- PIF cable incl. terminal block (1 m)
- Transport case
- Test certificate

Cooling Jacket Advanced
Universal cooling housing for infrared cameras up to 315 °C

- Ambient operating temperatures up to 315 °C
- Air/Water cooling with integrated air purging and optional protective windows
- Modular design for easy fitting of different devices and lenses
- Easy sensor removal on site due to quick-release chassis
- Integration of additional components such as TIM NetBox, USB Server Gigabit and Industrial Process Interface (PIF) in the extended version

Model	Cooling Jacket Advanced Standard	Cooling Jacket Advanced Extended
Protection class	IP65	IP65
Ambient temperature	up to 315 °C [1]	up to 315 °C [1]
Relative humidity	10 to 95 %, non-condensing	10 to 95 %, non-condensing
Material (housing)	V2A	V2A
Dimensions	271 mm x 166 mm x 182 mm	426 mm x 166 mm x 182 mm
Weight	5.7 kg	7.8 kg
Air purge collar	G1/4" internal thread G3/8" external thread	G1/4" internal thread G3/8" external thread
Cooling water fittings	G1/4" internal thread G3/8" external thread	G1/4" internal thread G3/8" external thread
Cooling water pressure	max. 15 bar (217 psi)	max. 15 bar (217 psi)
Scope of supply	▪ Cooling Jacket Advanced, consisting of housing with mounting angle, chassis ▪ Assembly instructions	▪ Cooling Jacket Advanced, consisting of housing with mounting angle, chassis ▪ Mounting accessories for TIM NetBox or USB Server Gigabit and Industry PIF ▪ Assembly instructions
	▪ Focusing unit or front attachment [2]	▪ Focusing unit or front attachment [2]

[1] Cable up to 250 °C ambient temperature and cable cooling up to 315 °C available.
[2] Must be ordered separately.

Cooling Jacket Advanced – Standard version

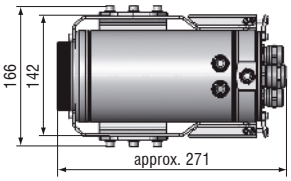

Cooling Jacket Advanced – Extended version

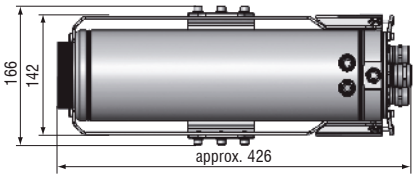

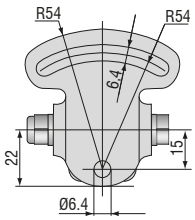

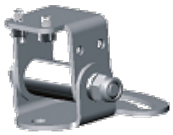

TM-MB-TIM adjustable mounting foot

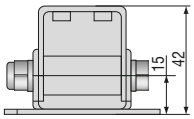

TM-PH-TIM protection housing incl. mounting foot

thermoIMAGER TIM USB Server Gigabit
Simple cable extension for the thermoIMAGER TIM series and pyrometers

- Fully compatible with USB 2.0, data transfer rate 1.5 / 12 / 480 mbps, USB transfer modes: Control, Bulk, Interrupt, Isochronous
- For all models in the thermoIMAGER TIM series 1x TIM VGA, 1x TIM QVGA, 2x TIM 160S
- Full TCP/IP support incl. routing and DNS
- 2x independent USB ports
- Galvanic isolation 500 V_{RMS} (network connection)
- Remote configuration via web-based management

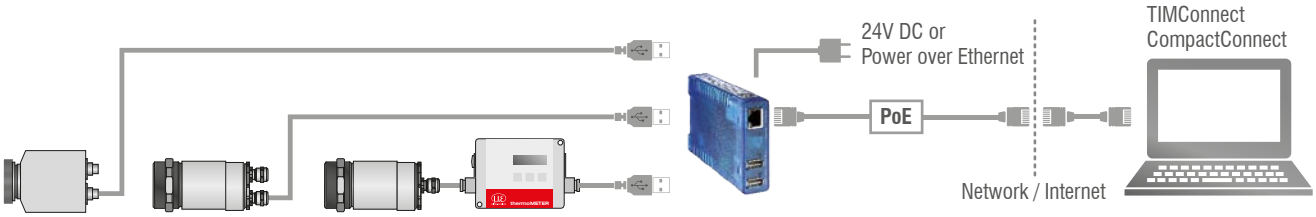

Model	TIM USB Server Gigabit
USB ports	2x independent USB ports
USB speed	480 Mbit/s
Network	10/100/1000 BaseT (max. 1000Mbit/s)
Power supply	Power over Ethernet (PoE) class 3 (6.49 - 12.95 W) or via screw terminal DC 24 V ... 48 V (±10 %)
Power consumption	External power supply (24 V DC) without USB devices: typ. 120 mA External power supply (24 V DC) with 2 USB devices each 2.5 W: typ. 420 mA
Ambient temperature	Storage: -40 ... 85 °C In operation, individually assembled: 0 ... 50 °C
Permissible relative humidity	0 - 95 % (non-condensing)
Housing	Compact plastic housing for DIN rail mount, 105 x 75 x 22 mm
Weight	200 g
Scope of supply	1 x USB Server Gigabit 24 V DC power supply unit Quick guide [1]
USB protocols	USB 1.0 / 1.1 / 2.0 Control / Bulk / Interrupt / Isochronous
Protocols for direct network connection	TCP/IP: Socket Auxiliary protocols: ARP, DHCP, HTTP, PING Inventory keeping, group management

[1] TIMConnect CD or Compact Connect CD: USB redirector | WuTility Management Tool | Operating instructions (DE/EN)

Industrial process interface
Camera and process control for use in industrial environments

- Industrial process interface with 3 analog / alarm outputs, 2 analog inputs, 1 digital input, 3 alarm relays
- 500 V AC_{RMS} galvanic isolation between TIM camera and process
- Separate fail-safe relay output
- TIM hardware with all cable connections and the TIMConnect software are permanently monitored during operation

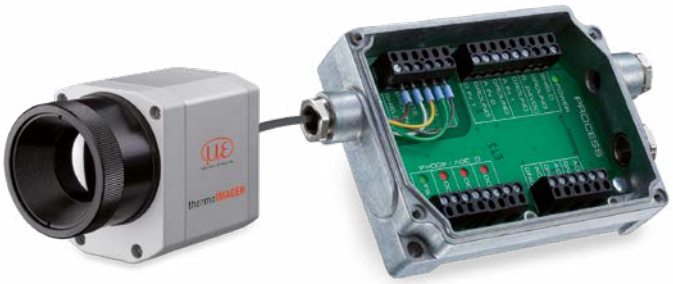

Exemplary fail-safe monitoring of the TIM camera with connected PLC

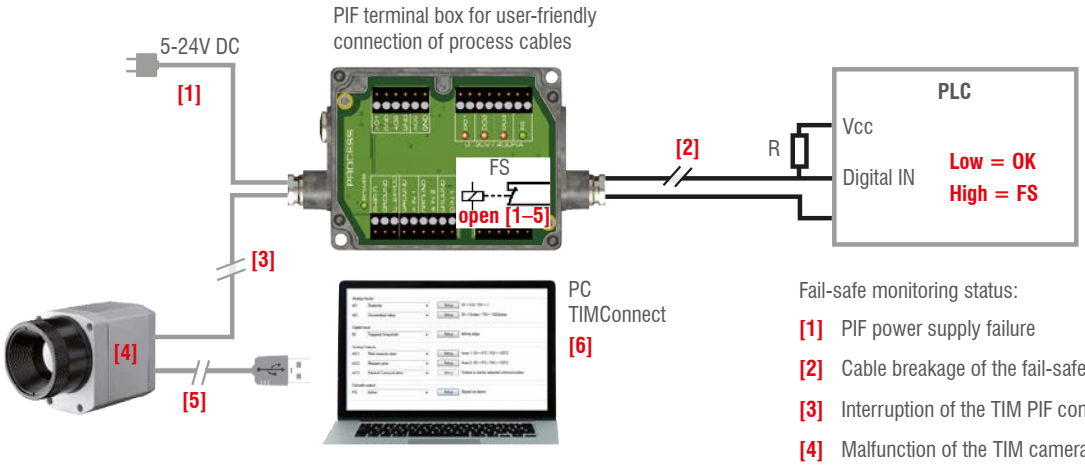

Fail-safe status:

Normal:	relay closed	LED on
Alarm:	relay opened	LED off

Fail-safe monitoring status:

- **[1]** PIF power supply failure
- **[2]** Cable breakage of the fail-safe cable
- **[3]** Interruption of the TIM PIF connection cable
- **[4]** Malfunction of the TIM camera
- **[5]** Failure of the TIM power supply / interruption of USB cable
- **[6]** Malfunction of the TIMConnect software

Model	Industrial process interface
Protection class	IP65 (NEMA-4)
Ambient temperature	-30 ... 85 °C
Storage temperature	-30 ... 85 °C
Relative humidity	10 to 95 %, non-condensing
Vibration resistance	IEC 60068-2-6 (non-condensing)/ IEC 60068-2-64 (broadband noise)
Shock resistance	IEC 60068-2-27 (25 g and 50 g)
Weight	610 g (with 5 m cable)
Cable lengths	5 m, optional 10 m and 20 m or HT cable (180 °C or 250 °C)
Power supply	5 to 24 V DC
LED indicators	2 green LEDs for voltage and fail safe / 3 red LEDs for alarm relay status
Insulation	500 V AC_{RMS} between TIM camera and process
Outputs	3 analog / alarm outputs | 3 alarm relays [1]
Inputs	2 analog inputs | 1 digital input
Ranges	0/4-20 mA (for AO 1 – 3) 0 – 30 V / 400 mA (for alarm relays DO1 – 3) 0 – 10 V (for AI 1 – 2) 24 V (for DI)
Analog inputs	Emissivity setting | Ambient temperature compensation | Reference temperature | Uncommitted value | Flag control triggered snapshots, triggered recordings, triggered line scan camera, triggered event grabber | Reset max./min. search
Digital input	Flag control | Triggered snapshots, triggered recordings, triggered line scan camera, triggered event grabber | Reset max./min. search
Analog Outputs	Main measuring range | Measuring range | Internal temperature | Flag status | Alarm | Frame synchronization | Fail safe External communication | Central pixel (direct output) [2]

[1] active if AO1, 2 or 3 is/are programmed as alarm output. [2] Function only available for TIM M-1 models

thermoIMAGER TIM NetPCQ
PC solution for thermoIMAGER TIM applications

TIM NetPCQ is a professional, embedded industrial PC solution with passive cooling (fanless) for thermoIMAGER applications and is suitable for top hat rail mounting. The NetPCQ and TIM cameras can be operated in combination as stand-alone system. Remote maintenance via Ethernet is possible. Data provided by the TIM camera can be stored directly on the NetPCQ where customer-specific software can also be installed. A recovery-stick is included in the scope of delivery.

thermoIMAGER TIM NetPCQ

- Supports all thermoIMAGER TIM models
- Supports 120 Hz (TIM 160S), up to 80 Hz (TIM QVGA), up to 32 Hz (TIM VGA) frame rates
- TIMConnect software included
- Monitor via VGA (analog)
- Integrated watchdog feature
- Optional: up to 20 m USB cable, high temperature USB cable, extendable up to 100 m Ethernet cable

Model	TIM NetPCQ
Ambient temperature	0 ... 50 °C
Storage temperature	-20 ... 60 °C
Relative humidity	10 to 95 %, non-condensing
Dimensions	165 x 65 x 130 mm (W x H x D)
Material (housing)	Anodized aluminum
Weight	1000 g
Vibration	IEC-2-6: 3G, 11 - 200Hz, each axis
Shock	IEC-2-27: 50G, 11 ms, each axis
Operating system	Windows 10 IOT
Power supply	12 - 24 V DC
Power consumption	approx. 9.5 W without TIM [0.76 A with 12 V]
Cooling	passive cooling (fanless)
Processor	Intel® Atom™ J1900 @ 4x2.4 GHz
Hard drive	integrated 64 GB SSD
RAM	2 GB DDR3 RAM 800 MHz
Connections	1 GigE, 2 x RS232 / 485, 3 x USB 2.0, 1 x USB 3.0, VGA
Additional functions	1x status LED

thermoIMAGER TIM NetBox
Miniature PC for thermoIMAGER TIM series

- Can be integrated into CoolingJacket Advanced Extended
- Miniature PC for all TIM models for standalone mode or for cable extension
- Supports 120 Hz (TIM 160S) up to 80 Hz (TIM QVGA), up to 32 Hz (TIM VGA) frame rate
- Integrated hardware and software watchdog
- Additional user software can be installed
- Optional: up to 20 m USB cable, high temperature USB cable, extendable up to 100 m Ethernet cable (PoE)

thermoIMAGER TIM NetBox

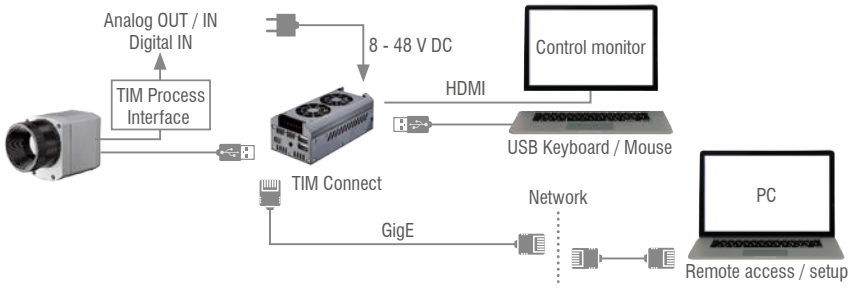

Model	TIM NetBox
Operating temperature	0 ... 50 °C
Storage temperature	-20 ... 75 °C
Relative humidity	10 to 95 %, non-condensing
Material (housing)	Anodized aluminum
Dimensions	113 x 57 x 47 mm
Weight	385 g
Vibration	IEC 60068-2-6 (sinus-shaped) / IEC 60068-2-64 (broadband noise)
Shock	IEC 60068-2-27 (25 g and 50 g)
Operating system	Windows 10 Enterprise
Power supply	8 ... 48 V DC or Power over Ethernet (PoE/ 1000BASE-T)
Power consumption	7.5 W (+ additional 2.5 W for TIM camera)
Cooling	Active via two integrated fans
Board	COM Express® mini embedded board
Processor	Intel Atom® E3940 Quad Core 1.6 / 1.8 GHz (Turbo)
Hard drive	32 GB SSD
RAM	4 GB (DDR, 533 MHz)
Connections	2x USB 2.0, 1x USB 3.0, 1x Mini-USB 2.0, Micro-HDMI, Ethernet (Gigabit Ethernet)
Extensions	micro SDHC/ SDXC card
Additional functions	4x status LEDs

TIMConnect SOFTWARE FEATURES

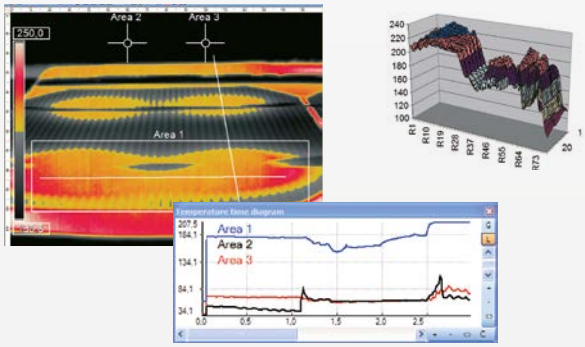

Comprehensive IR camera software

- License-free analysis software and complete SDK included
- Intuitive user interface
- Camera remote control via software
- Displays several camera images in different windows
- Compatible with Windows 7, 8 and 10
- Data output via PIF hardware interface using up to 3 analog channels

Windows 10

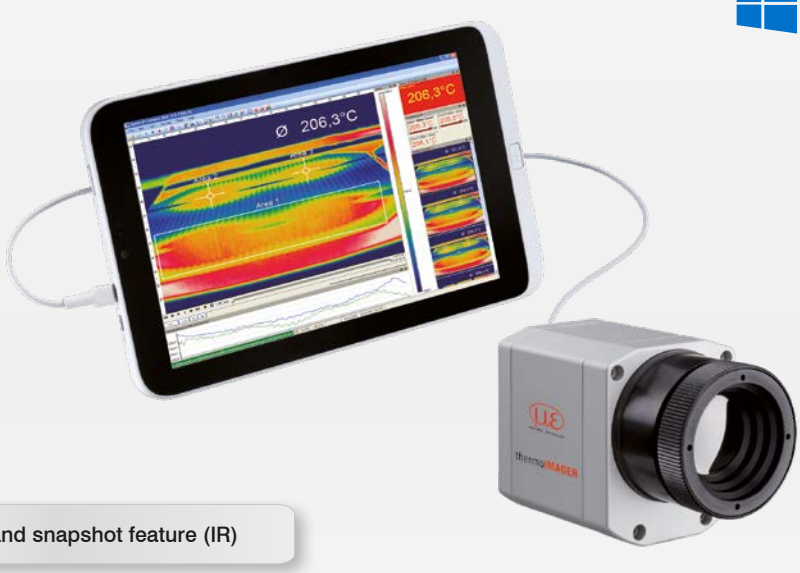

Video recording and snapshot feature (IR)

- Recording of video sequences and individual images for later analysis or documentation
- Adjustable frame rate to reduce data volume
- Display of snapshot process for direct analysis

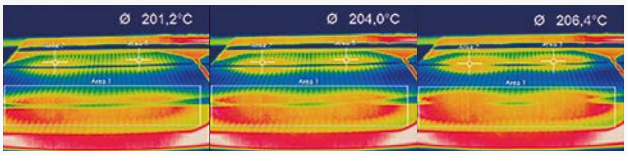

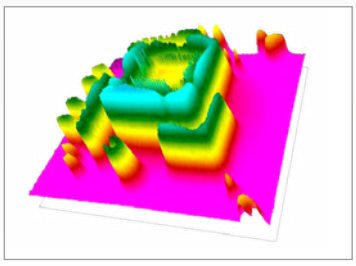

Online and offline data analysis

- Real-time temperature information (°C or °F) in main window, as digital display or graphic display
- Detailed analysis using measuring fields, automatic hotspot/coldspot search
- Logical linking of temperature information
- Slow-motion replay without connected camera
- Various layout functions and color palettes to highlight thermal contrasts

Temperature data analysis and documentation

- Triggered data collection
- Radiometric video sequences (*.ravi) and snapshots (*.tiff)
- Thermal images as *.tiff or *.csv, *.dat text files incl. complete temperature information
- Data transfer in real time to other software programs via DLL or COM port interfaces

Lenses thermoIMAGER TIM VGA

TIM VGA 640 x 480 px	Focal length [mm]	Angle	Minimum measurement distance*	Distance to measurement object [m]											
					0.1	0.2	0.3	0.5	1	2	4	6	10	30	100
33° Standard lens	18.7	33° 25° 41° 0.91 mrad	0.2 m	HFOV [m] VFOV [m] DFOV [m] IFOV [mm]	0.068 0.051 0.085 0.1	0.13 0.09 0.16 0.2	0.19 0.14 0.23 0.3	0.31 0.23 0.38 0.5	0.60 0.45 0.75 0.9	1.20 0.89 1.49 1.8	2.38 1.77 2.97 3.6	3.57 2.65 4.45 5.5	5.9 4.4 7.4 9.1	17.8 13.2 22.2 27.3	59.3 44.2 74.0 90.9
15° Telephoto lens	41.5	15° 11° 19° 0.41 mrad	0.5 m	HFOV [m] VFOV [m] DFOV [m] IFOV [mm]				0.13 0.10 0.17 0.2	0.26 0.20 0.33 0.4	0.52 0.39 0.66 0.8	1.05 0.79 1.31 1.6	1.57 1.18 1.96 2.5	2.6 2.0 3.3 4.1	7.8 5.9 9.8 12.3	26.1 19.6 32.7 41.0
60° Wide angle lens	10.5	60° 45° 75° 1.62 mrad	0.2 m	HFOV [m] VFOV [m] DFOV [m] IFOV [mm]	0.128 0.091 0.157 0.2	0.25 0.18 0.30 0.3	0.36 0.26 0.44 0.5	0.59 0.42 0.72 0.8	1.17 0.83 1.43 1.6	2.32 1.66 2.85 3.2	4.63 3.31 5.69 6.5	6.94 4.96 8.52 9.7	11.6 8.3 14.2 16.2	34.6 24.7 42.6 48.6	115.4 82.4 141.8 161.9
90° Super wide angle lens	7.7	90° 64° 111° 2.21 mrad	0.2 m	HFOV [m] VFOV [m] DFOV [m] IFOV [mm]	0.220 0.138 0.260 0.2	0.43 0.27 0.50 0.4	0.63 0.39 0.73 0.7	1.03 0.64 1.21 1.1	2.03 1.27 2.39 2.2	4.04 2.53 4.76 4.4	8.06 5.05 9.50 8.8	12.07 7.57 14.24 13.2	20.1 12.6 23.7 22.1	60.3 37.8 71.1 66.2	200.8 125.9 237.0 220.8

FOV = Field of view; HFOV = Horizontal field of view; VFOV = Vertical field of view; DFOV = Diagonal dimension of the total measuring field at the object level; IFOV = Indicated field of view
Table with examples showing which measuring field sizes and pixel sizes are reached at which distance. Various lenses are available for optimal configuration of the camera.
Wide angle lenses have radial distortion due to the angle of their aperture. The TIMConnect software has an algorithm which corrects this distortion.

* Please note: The measurement accuracy of the camera may lie outside of the specifications for distances below the defined minimum measurement distance.

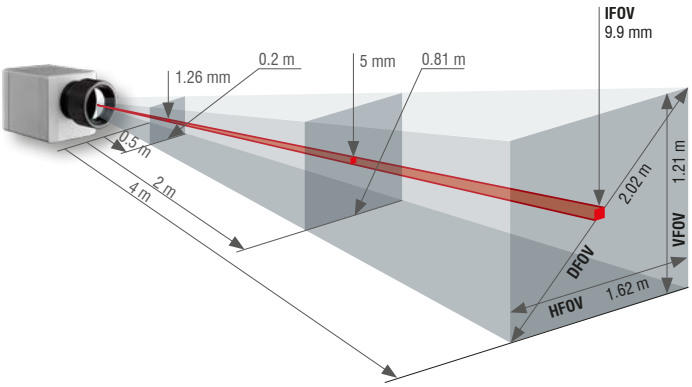

- Standard-, telephoto- and wide angle lenses for optimal adaptation to different applications
- High quality germanium lenses and special anti-reflective coating for excellent optics
- Factory-calibrated lenses for easy exchange of optical system without recalibration

Measuring field sizes can be calculated online at www.micro-epsilon.com/optikkalkulator.

Sensors and Systems from Micro-Epsilon

Sensors and systems for displacement, distance and position

Sensors and measurement devices for non-contact temperature measurement

Measuring and inspection systems for metal strips, plastics and rubber

Optical micrometers and fiber optics, measuring and test amplifiers

Color recognition sensors, LED analyzers and inline color spectrometers

3D measurement technology for dimensional testing and surface inspection

Modifications reserved / Y9761389-F012042SGO

MICRO-EPSILON

MICRO-EPSILON Headquarters
Koenigbacher Str. 15 · 94496 Ortenburg / Germany
Tel. +49 (0) 8542 / 168-0 · Fax +49 (0) 8542 / 168-90
info@micro-epsilon.com · **www.micro-epsilon.com**